A-1

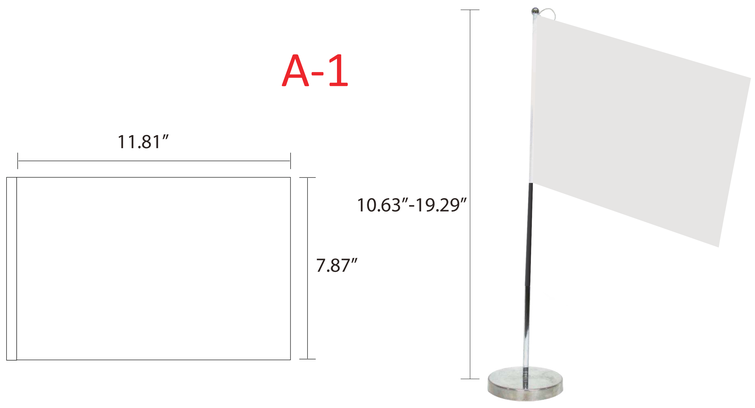

A-2

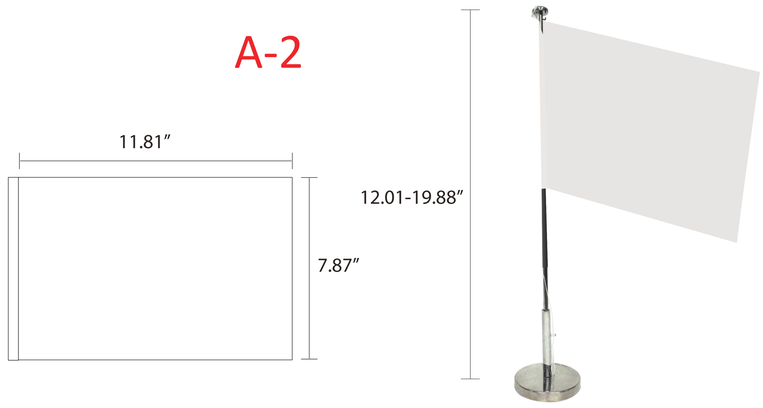

A-3

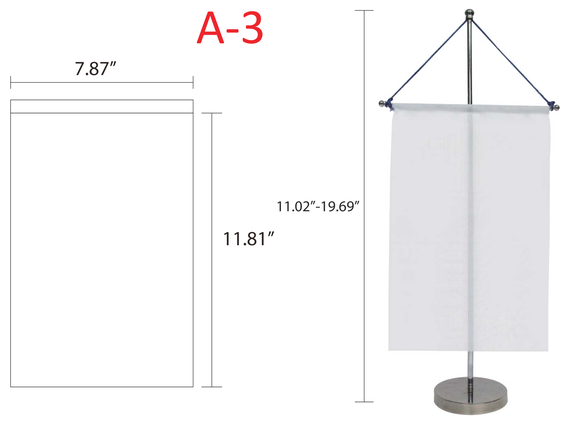

B-1

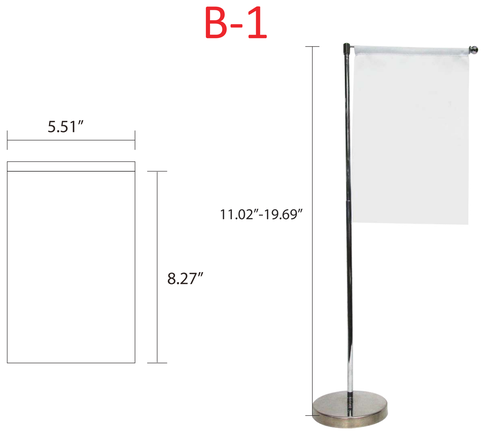

B-2

1set-2pcs flags

B-3

1set-2pcs flags

C-1

1set-2pcs flags

C-2

1set-3pcs flags

C-3

1set-4pcs flags

D-1

1set-2pcs flags

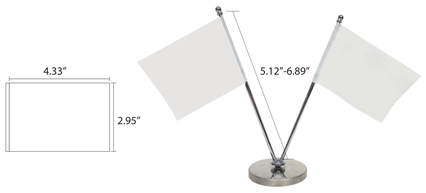

D-2

1set-2pcs flags

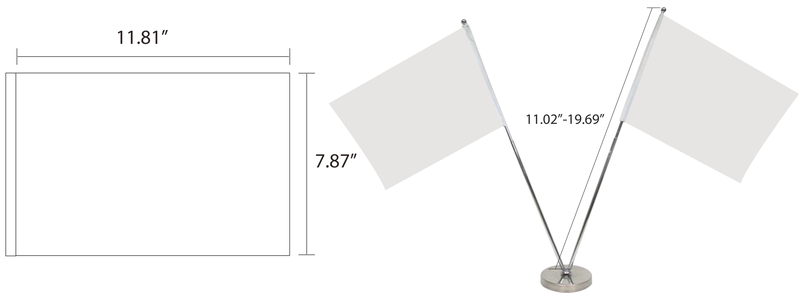

D-3

1set-3pcs flags

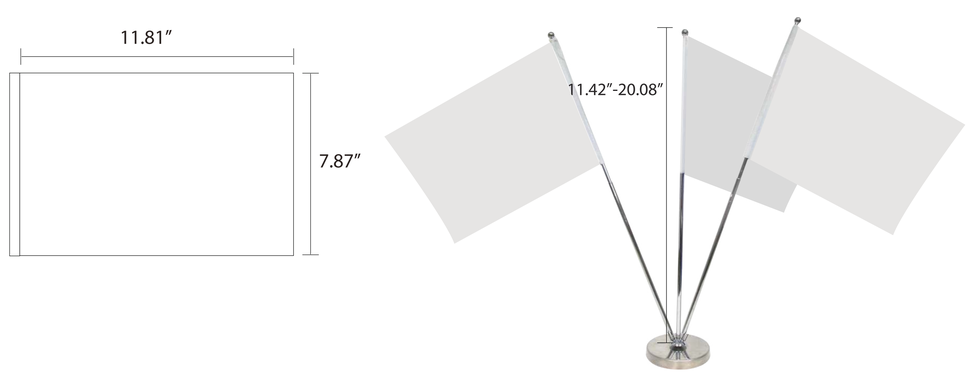

teardrop

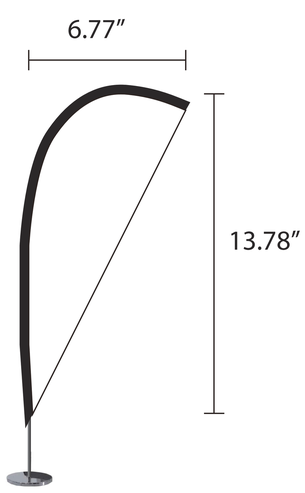
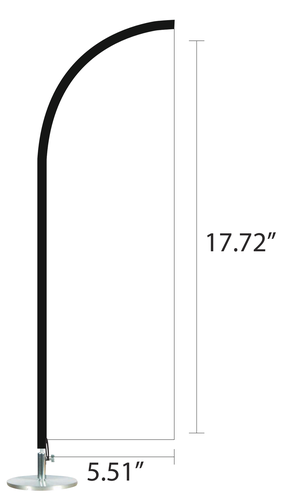
blade